MODEL	SUZUKI DL V-STROM 650	YEAR	2017 -->	SCHEMATIC
LINE	FULL SYSTEM	MUFFLER	OVAL CARBON CAP	

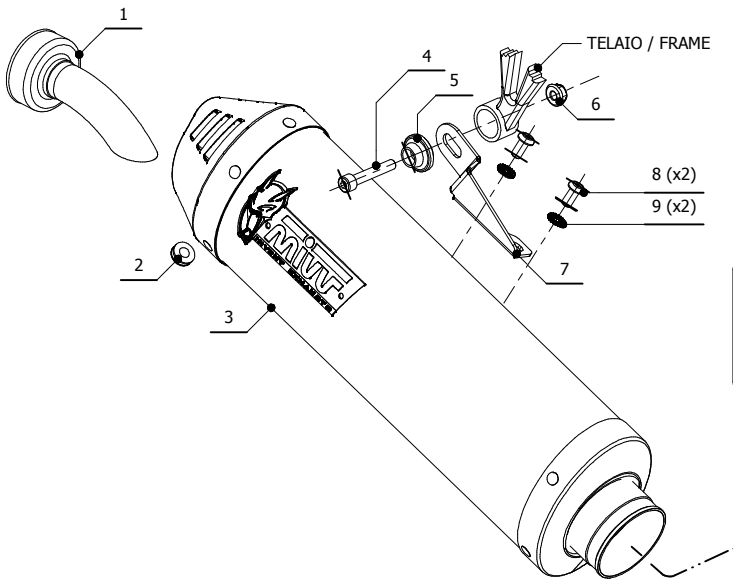

Catalytic Converter
Cod. ACC.046.A1
Optional for S.049.LEC - S.049.LNC
Included in S.049.KEC - S.049.KNC

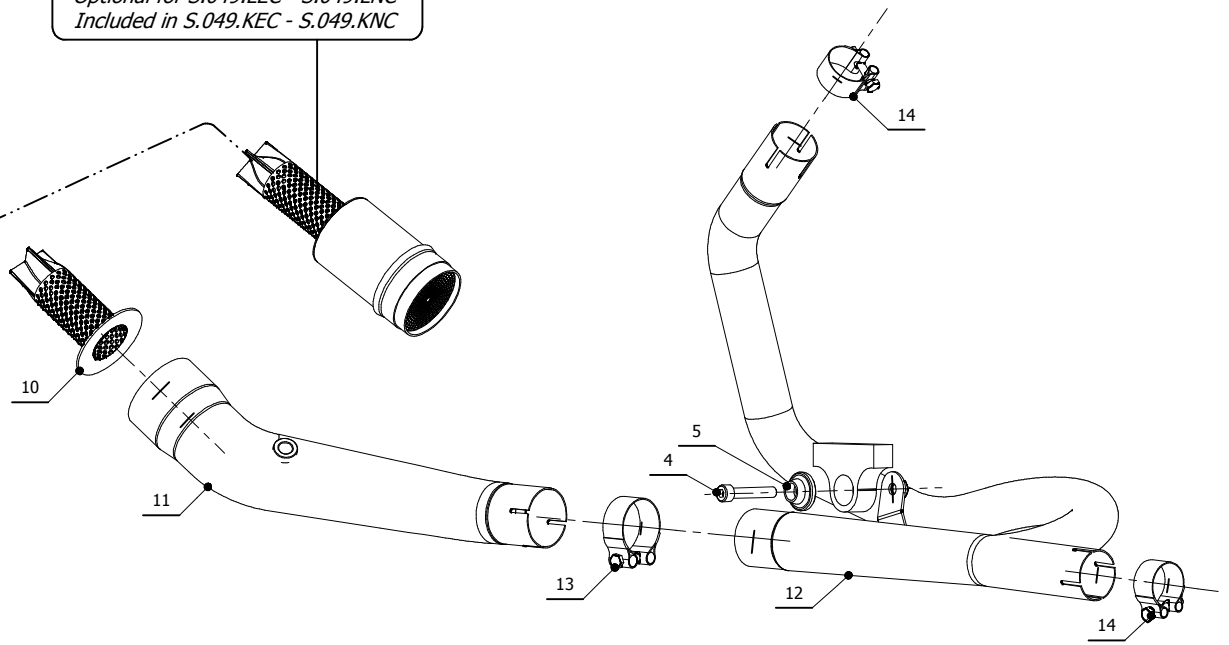

ELENCO PARTI / PARTS LIST

#	QTÀ / QTY	DESCRIZIONE / DESCRIPTION	CODICE / CODE
1	1	DB killer / DB killer	50.DK.092.0
2	1	Tappo in gomma / Rubber stopper	50.73.266.1
3	1	Silenziatore / Muffler L.400	OVAL CARBON CAP
4	2	Vite M8x45 / Screw M8x45	50.73.602.1
5	2	Rondella in alluminio nera / Black aluminium washer	50.73.221.1
6	1	Dado M8 flangiato / Flanged nut M8	50.73.393.1
7	1	Staffa / Bracket	50.SS.1042.0
8	2	Vite M8 x 16 / Screw M8 x 16	50.73.098.1
9	2	Rondella di sicurezza / Safety washer	50.73.604.1
10	1	Db Killer forato / Drilled DB killer	50.DK.126.0
11	1	Tubo di raccordo / Link pipe	9773S049SE
12	1	Tubo di raccordo / Link pipe	9773S049C1
13	1	Fascetta Ø 44/47 mm / Pipe clamp Ø 44/47 mm	50.FA.006.1
14	2	Fascetta Ø 36/39 mm / Pipe clamp Ø 36/39 mm	50.FA.002.1

APPLICAZIONI / APPLICATIONS

CODICE / CODE	SILENZIATORE / MUFFLER	TUBO / PIPE	FASCETTA / CLAMP	NOTE
S.049.LEC S.049.LNC	CARBONIO (COPPA CARBONIO) / CARBON (CARBON CAP) TITANIO (COPPA CARBONIO) / TITANIUM (CARBON CAP)	INOX / ST.STEEL	///	CATALYTIC CONVERTER NOT INCLUDED
S.049.KEC S.049.KNC	CARBONIO (COPPA CARBONIO) / CARBON (CARBON CAP) TITANIO (COPPA CARBONIO) / TITANIUM (CARBON CAP)	INOX / ST.STEEL	///	CATALYTIC CONVERTER INCLUDED