MODEL	KTM DUKE 390	YEAR	2013-2016	SCHEMATIC
LINE	FULL SYSTEM	MUFFLER	GHIBLI	

ELENCO PARTI / PARTS LIST

#	QTÀ / QTY	DESCRIZIONE / DESCRIPTION	CODICE / CODE
1	3	Vite M4 x 12 / Screw M4 x 12	50.73.438.1
2	3	Rondella M4 / Washer M4	50.73.440.1
3	1	DB killer / DB killer	50.DK.051.0
4	1	DB killer racing / Racing DB killer	50.DK.052.0
5	1	Silenziatore / Muffler	GHIBLI
6	1	Vite M8x25 / Screw M8x25	50.73.064.1
7	1	Rondella alluminio / Aluminium washer	50.73.291.1
8	3	Dado M8 flangiato / Flanged nut M8	50.73.393.1
9	1	Staffa / Bracket	50.SS.687.0
10	1	Tubo di raccordo / Link pipe	9773KT009S7B
11	1	Silenziatore / Muffler	9873KT009S2A
12	1	Tubo di raccordo / Link pipe	9773KT012S7A
13	1	Vite M8x40 / Screw M8x40	50.73.075.1
14	1	Rondella in alluminio / Aluminium washer	50.73.248.1
15	1	Distanziale alluminio / Aluminium spacer (Øe.20 Øi.8,5 h.14)	50.SS.058.1
16	1	Vite M8x16 / Screw M8x16	50.73.006.1
17	1	Guarnizione in grafite / Graphite bush	50.72.42.49.29
18	1	Fascetta Ø 48/51 mm / Pipe clamp Ø 48/51 mm	50.FA.007.1
19	1	Molla media / Mid-size spring	50.73.359.1
20	1	Tubo in gomma per molla / Rubber pipe for spring	50.73.210.1
21	1	Db Killer / DB killer	50.DK.081.0

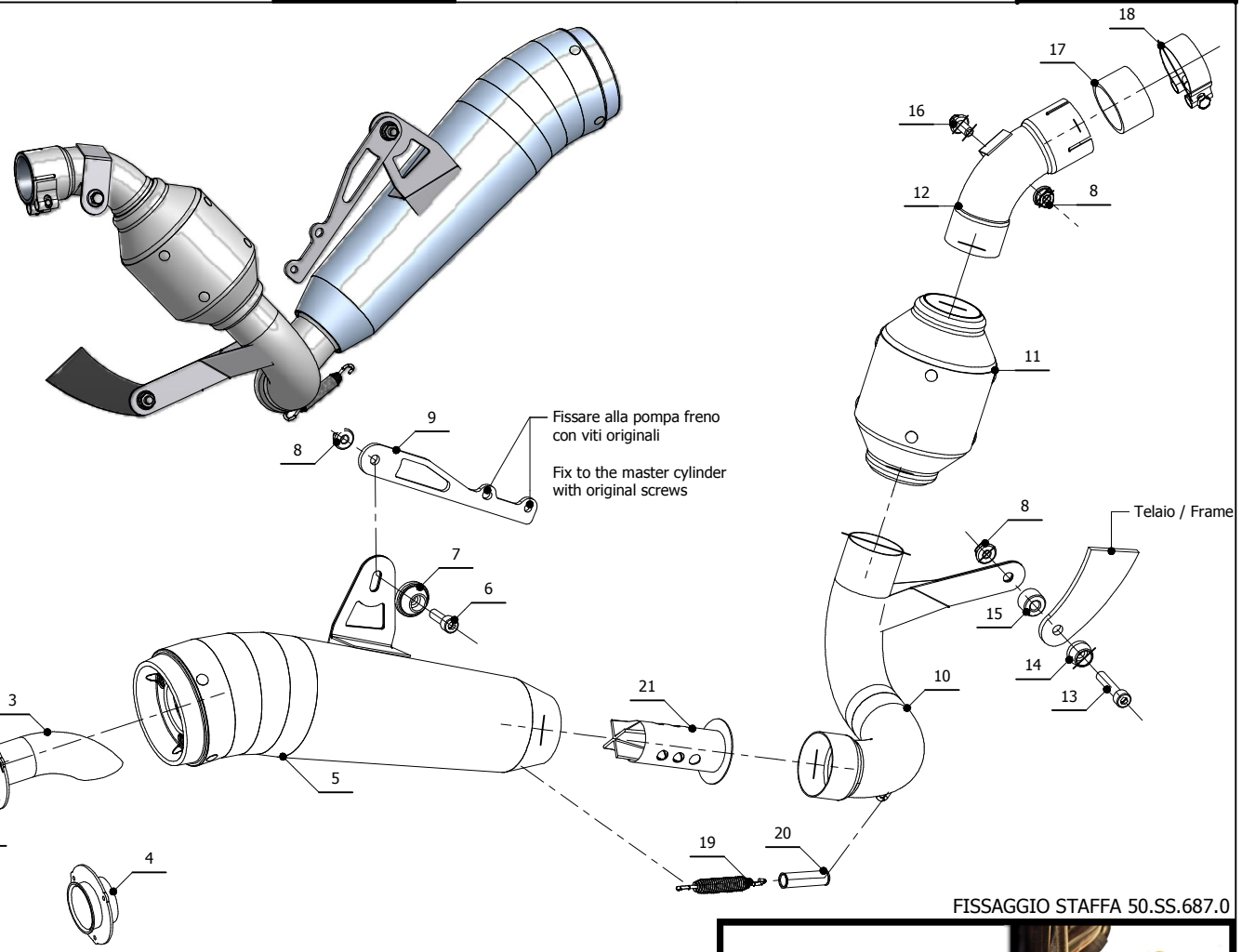

FISSAGGIO STAFFA 50.SS.687.0

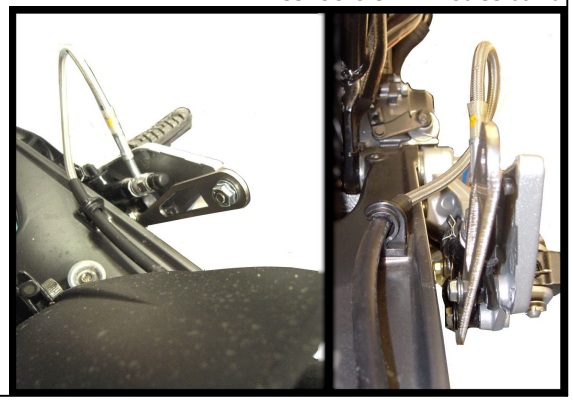

APPLICAZIONI / APPLICATIONS

CODICE / CODE	SILENZIATORE / MUFFLER	TUBO / PIPE
KT.012.LGXB	STEEL BLACK	INOX / ST. STEEL