MODEL	DUCATI HYPERMOTARD 796	YEAR	2010-->	SCHEMATIC
LINE	SPORT	MUFFLER	SUONO	

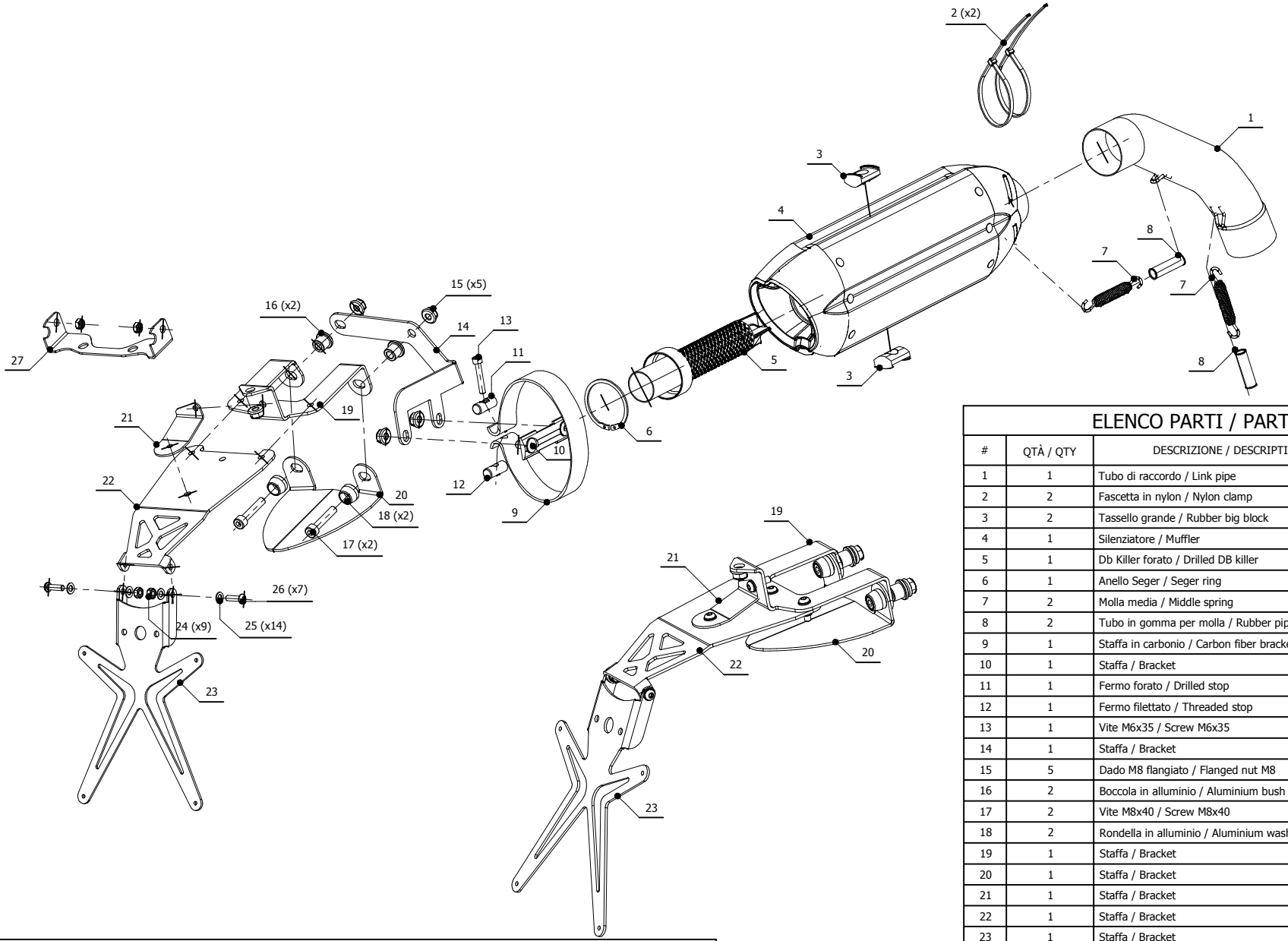

ELENCO PARTI / PARTS LIST

#	QTÀ / QTY	DESCRIZIONE / DESCRIPTION	CODICE / CODE
1	1	Tubo di raccordo / Link pipe	9773D026S7
2	2	Fascetta in nylon / Nylon clamp	50.73.360.1
3	2	Tassello grande / Rubber big block	50.73.203.1
4	1	Silenziatore / Muffler	SUONO
5	1	Db Killer forato / Drilled DB killer	50.DK.025.0
6	1	Anello Seger / Seger ring	50.73.218.1
7	2	Molla media / Middle spring	50.73.359.1
8	2	Tubo in gomma per molla / Rubber pipe for spring	50.73.210.1
9	1	Staffa in carbonio / Carbon fiber bracket	50.SS.252.1
10	1	Staffa / Bracket	50.SS.253.0
11	1	Fermo forato / Drilled stop	50.73.214.1
12	1	Fermo filettato / Threaded stop	50.73.213.1
13	1	Vite M6x35 / Screw M6x35	50.73.228.1
14	1	Staffa / Bracket	50.SS.456.1
15	5	Dado M8 flangiato / Flanged nut M8	50.73.052.1
16	2	Boccola in alluminio / Aluminium bush	50.73.397.1
17	2	Vite M8x40 / Screw M8x40	50.73.075.1
18	2	Rondella in alluminio / Aluminium washer	50.73.248.1
19	1	Staffa / Bracket	50.SS.457.A
20	1	Staffa / Bracket	50.SS.457.E
21	1	Staffa / Bracket	50.SS.457.C
22	1	Staffa / Bracket	50.SS.457.B
23	1	Staffa / Bracket	50.SS.457.D
24	9	Dado M6 autobloccante / M6 locknut	50.73.112.1
25	14	Rondella M6 / Washer M6	50.72.027.1
26	7	Vite M6 x 20 / Screw M6 x 20	50.73.422.1
27	1	Staffa porta frecce / Direction indicators bracket	50.SS.270.1

APPLICAZIONI / APPLICATIONS

CODICE / CODE	TUBO / PIPE	SILENZIATORE / MUFFLER	FASCETTA / CLAMP	
D.026.L7	INOX / ST. STEEL	INOX (COPPE CARBONIO) / ST. STEEL (CARBON CAPS)	CARBONIO / CARBON FIBER	
D.026.L9	INOX / ST. STEEL	STEEL BLACK	CARBONIO / CARBON FIBER	