MODEL	DUCATI MONSTER 695	YEAR	2006 - 2008	SCHEMATIC
LINE	SLIP ON	MUFFLER	GP	

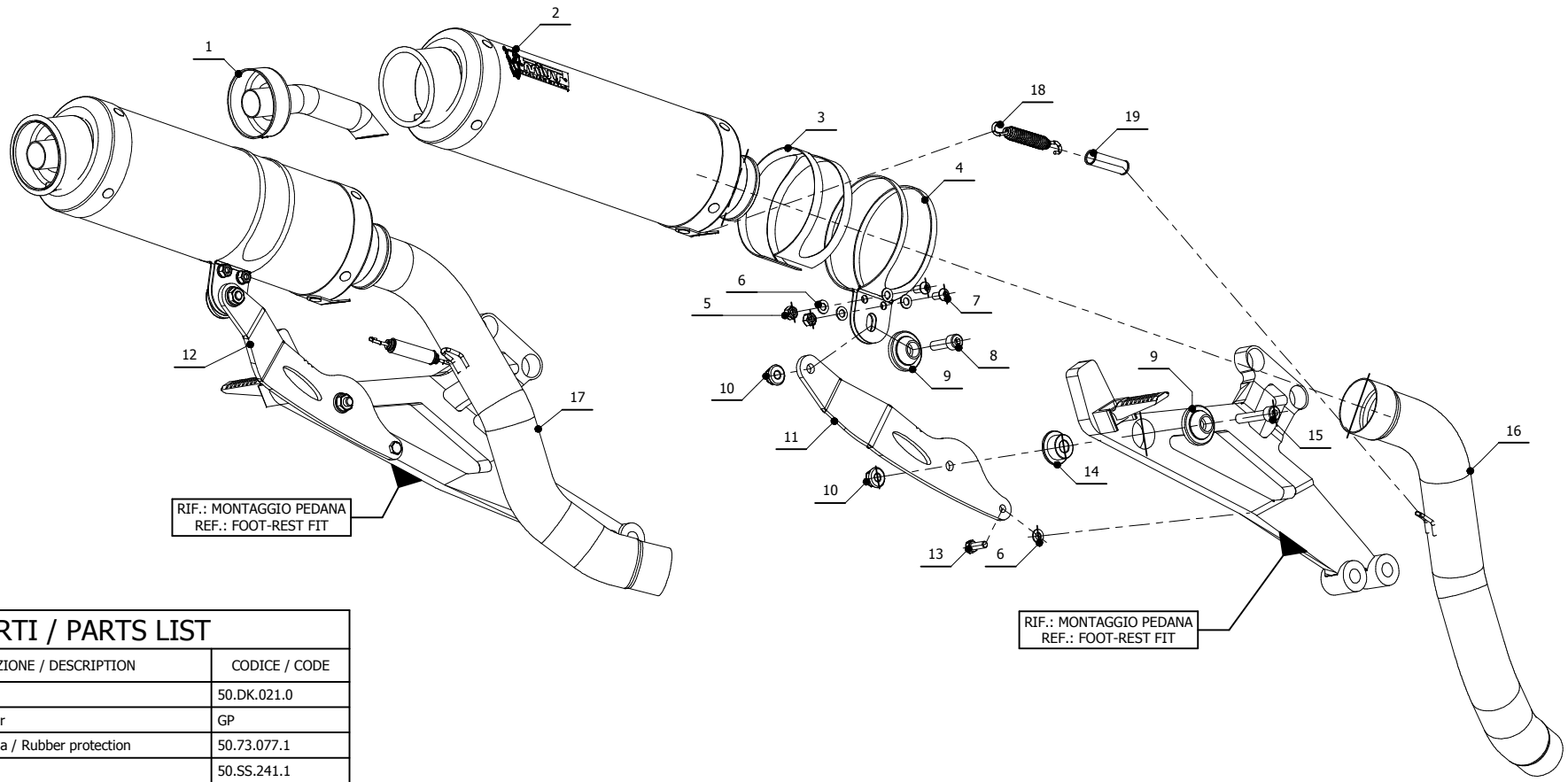

ELENCO PARTI / PARTS LIST

#	QTÀ / QTY	DESCRIZIONE / DESCRIPTION	CODICE / CODE
1	2	DB killer / DB killer	50.DK.021.0
2	2	Silenziatore / Muffler	GP
3	2	Protezione in gomma / Rubber protection	50.73.077.1
4	2	Staffa / Bracket	50.SS.241.1
5	4	Dado M6 / Nut M6	50.72.038.1
6	10	Rondella M6 / Washer M6	50.72.027.1
7	4	Vite M6 x 12 / Screw M6 x 12	50.72.024.1
8	2	Vite M8x25 / Screw M8x25	50.73.064.1
9	4	Rondella in alluminio / Aluminium washer	50.73.063.1
10	4	Dado M8 flangiato / Flanged nut M8	50.73.052.1
11	1	Staffa destra / Right bracket	50.SS.041.1
12	1	Staffa sinistra / Left bracket	50.SS.042.1
13	2	Vite M6x16 / Screw M6x16	50.73.087.1
14	2	Bussola in alluminio / Aluminium bush	50.73.182.1
15	2	Vite M8x40 / Screw M8x40	50.73.075.1
16	1	Tubo di raccordo / Link pipe	9773AD019S2DX
17	1	Tubo di raccordo / Link pipe	9773AD019S2SX
18	2	Molla lunga / Long spring	50.71.080.1
19	2	Tubo in gomma per molla / Rubber pipe for spring	50.73.210.1

APPLICAZIONI / APPLICATIONS

CODICE / CODE	TUBO / PIPE	SILENZIATORE / MUFFLER	FASCETTA / CLAMP
AD.019.L2S	INOX / ST. STEEL	CARBONIO / CARBON FIBER	INOX / ST. STEEL
AD.019.L6S	INOX / ST. STEEL	TITANIO / TITANIUM	INOX / ST. STEEL